ASSEMBLY INSTRUCTIONS

ATTENTION:
1. Please check the manual carefully and make sure you have received all the parts.
2. If there is any missing, please let us know the letter of the parts you need.
3. If there is any damage, please send clear photos to us, we will check and offer you best solution soon.

Four piece sofa set

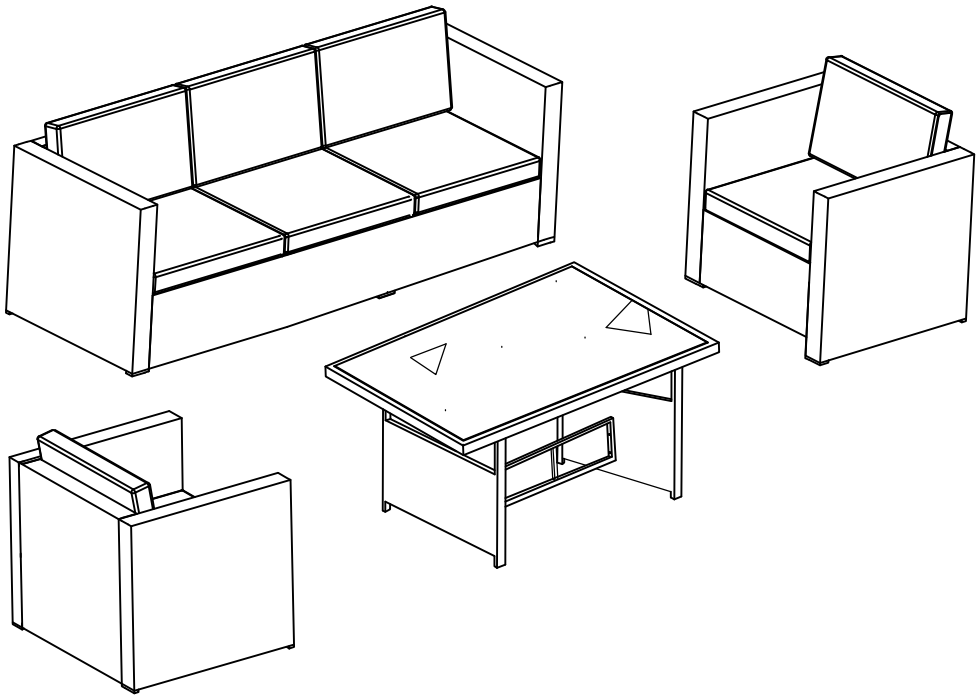

Part List

A Left arm Panel	B Right arm Panel	C Single sofa back	D Single sofa seat	E Three person sofa back
3PCS	3PCS	2PCS	2PCS	1PC
F Three person sofa seat	G Coffee table panel	H Table Leg	I Connecting rod	J Temperd glass
1PC	1PC	2PCS	1PC	1PC
K Sofa cushion	L Sofa back cushion	M M6*55mm	N M6*45mm	Y M6*15mm
5PCS	5PCS	38PCS	28PCS	4PCS
O M6*35mm	P M6	Q M6mm	R M6	S M6
4PCS	46PCS	66PCS	1PC	1PC
T 100*100	U 100*100	V M6		
12PCS	2PCS	14PCS		

single person sofa

Assembly Steps

PARTS LIST

N	M6*45mm	8PCS
M	M6*55mm	12PCS
P	M6mm	12PCS
Q	M6mm	20PCS
R	M6	1PC
S	M6	1PC
T	100*100	4PCS
V	M6mm	4PCS

Step ①

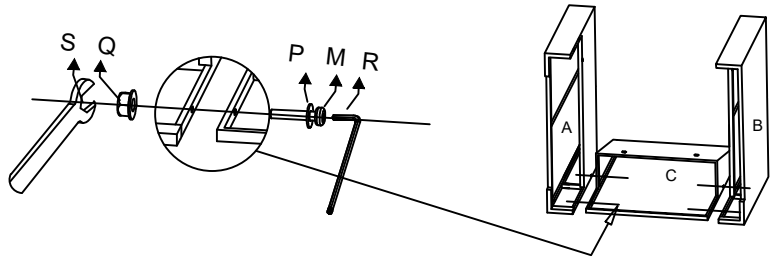

M x4
P x4
Q x4

Step②

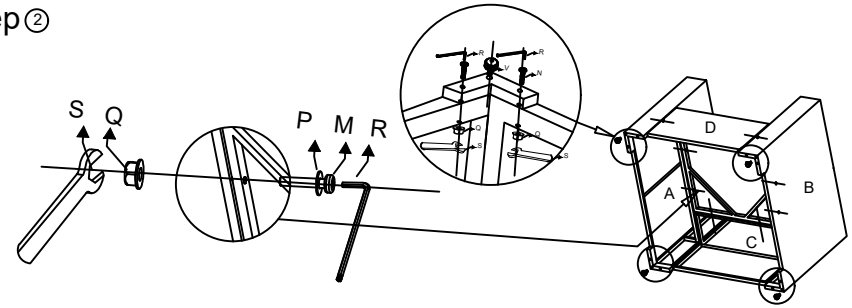

N x8
M x8
P x8
Q x16
V x4

Step③

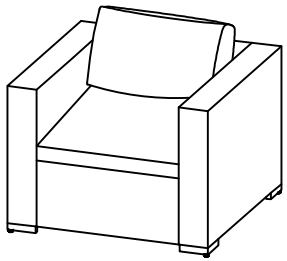

Three person sofa

Assembly Steps

PARTS LIST

N	M6*45mm	12PCS
M	M6*55mm	14PCS
P	M6mm	14PCS
Q	M6mm	26PCS
R	M6	1PC
S	M6	1PC
T	100*100	4PCS
U	100*100	2PCS
V	M6mm	6PCS

Step ①

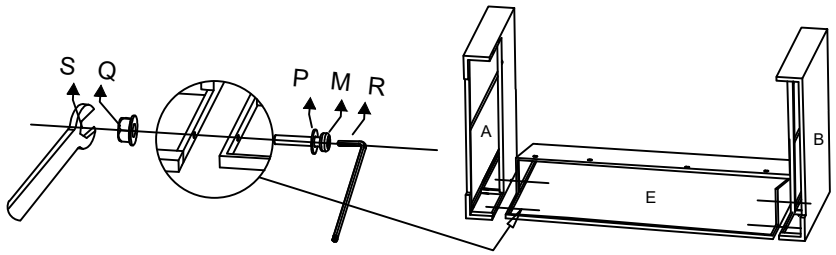

M x4
P x4
Q x4

Step ②

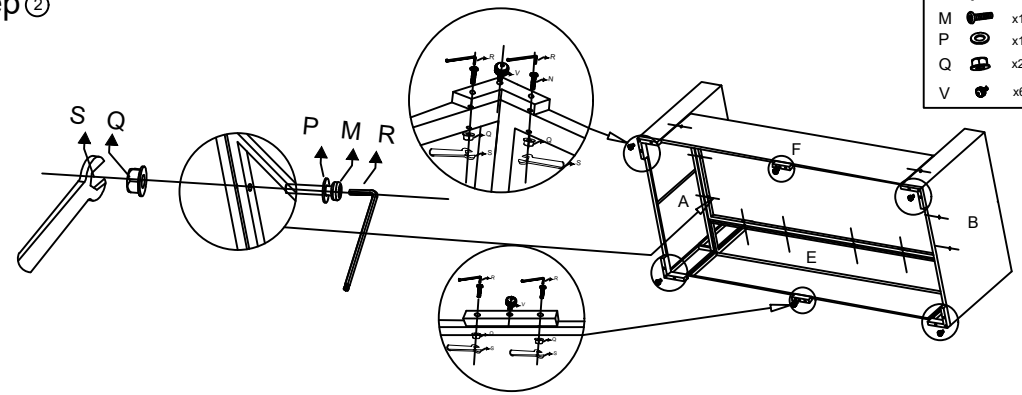

N x12
M x10
P x10
Q x22
V x6

Step ③

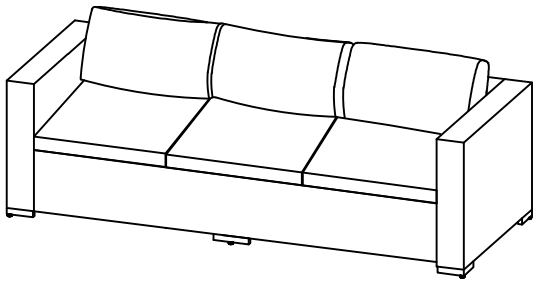

Square table

Assembly Steps

PARTS LIST

G	Coffee table panel	1PC
H	Table Leg	2PCS
I	Fixed Frame	1PC
J	Temperd glass	1PC
Y	M6*15mm	4PCS
o	M6*35mm	4PCS
P	M6mm	8PCS
R	M6	1PC

Step①

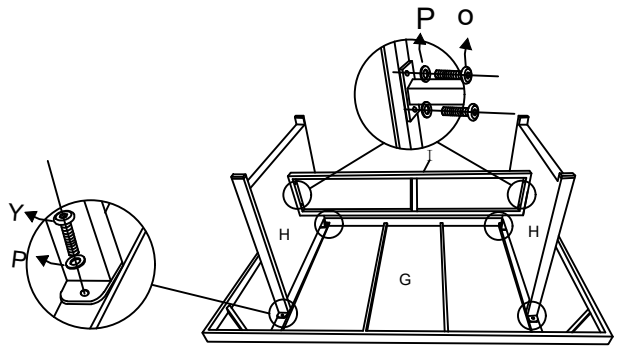

Y		x4
P		x8
o		x4

Step②

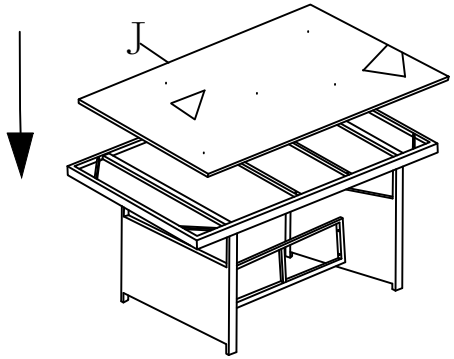
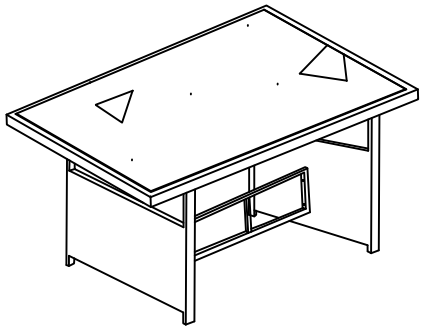
Step③